Introduction to Logic Gates

Submitted by:

Name	ID
Nawaf Alabdi	B00093759
Ali Abdelatief	B00099836

Submitted to:

Ms. Salsabeel Shapsough

Lab Instructor

American University of Sharjah

College of Engineering

Submitted on:

9/9/2024

Abstract

This lab introduces logic gates and using them to construct logic circuits in LogiSim, as well as using timing diagrams and truth tables to evaluate Boolean expressions.

Introduction

In this lab we learned how to read and evaluate Boolean equations given in a timing diagram. We also learned how to convert between logic circuit diagrams and Boolean expressions, and verify the truth table using the LogiSim simulator.

Theoretical Background

To conduct this experiment, a basic understanding of Boolean algebra and logical operators is required. In its essence, Boolean algebra is a branch of mathematics that deals with the fundamental logical operators (AND, OR, NOT) and how they are combined with binary variables to produce new functions.

A binary variable is fundamentally a statement which may be true or false.

The AND operator (denoted with '.') combines two Boolean variables and outputs True only if both inputs are True; otherwise it outputs False.

The OR operator (denoted with '+') combined two Boolean variables and outputs False only when both inputs are false; otherwise it outputs True.

The NOT operator (denoted with an overhead bar) inverts the truth value of the input. NOT 1 = 0, and NOT 0 = 1.

In a circuit diagram, each one of these operators is symbolized by the different gates which can be found in LogiSim. The following screenshot displays the NOT, AND, and OR gates respectively.

Experimental work, Results and Discussion

Lab Activities:

1. Complete the following timing diagram and build the truth table for inputs and outputs:

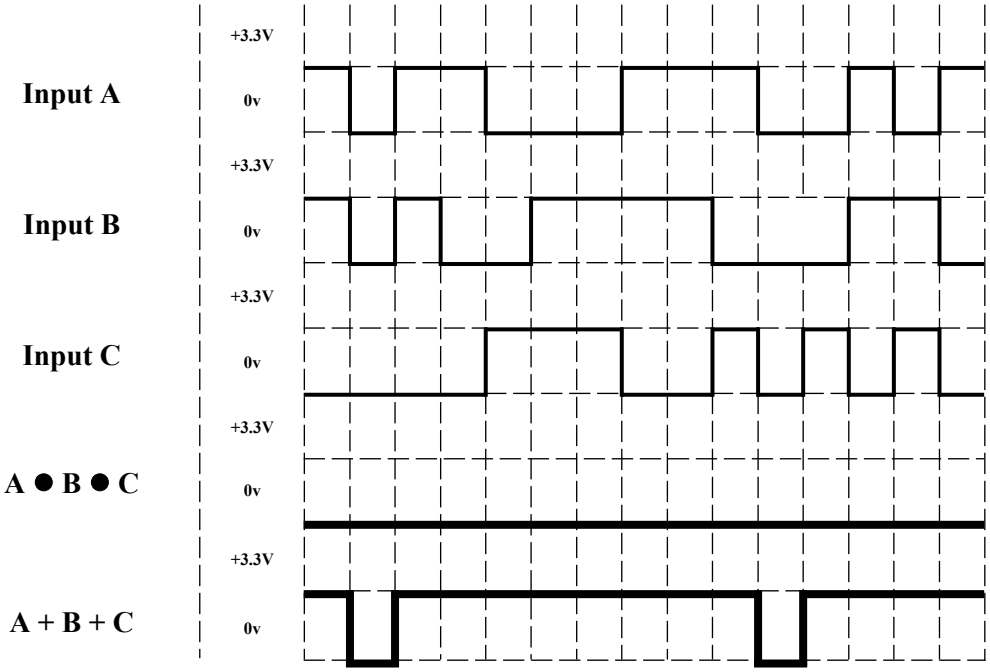

a. When is the output of an AND gate HIGH?
When all inputs into the gate are HIGH (1).

b. When is the output of an OR gate LOW?

When all the inputs into the gate are LOW (0).

2. Given the following digital circuit: Write the Boolean expression F:

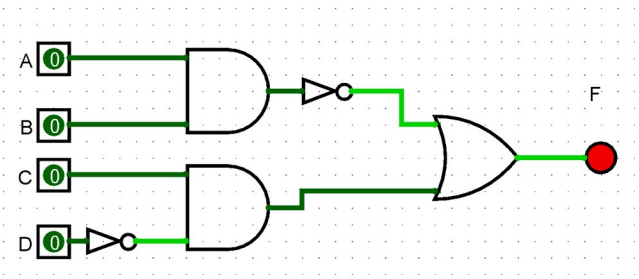

a. Write the Boolean expression F.

$$F(A,B,C,D)=(\overline{A.B})+(C.\overline{D})$$

b. Implement the circuit and verify your answer for (2.a)

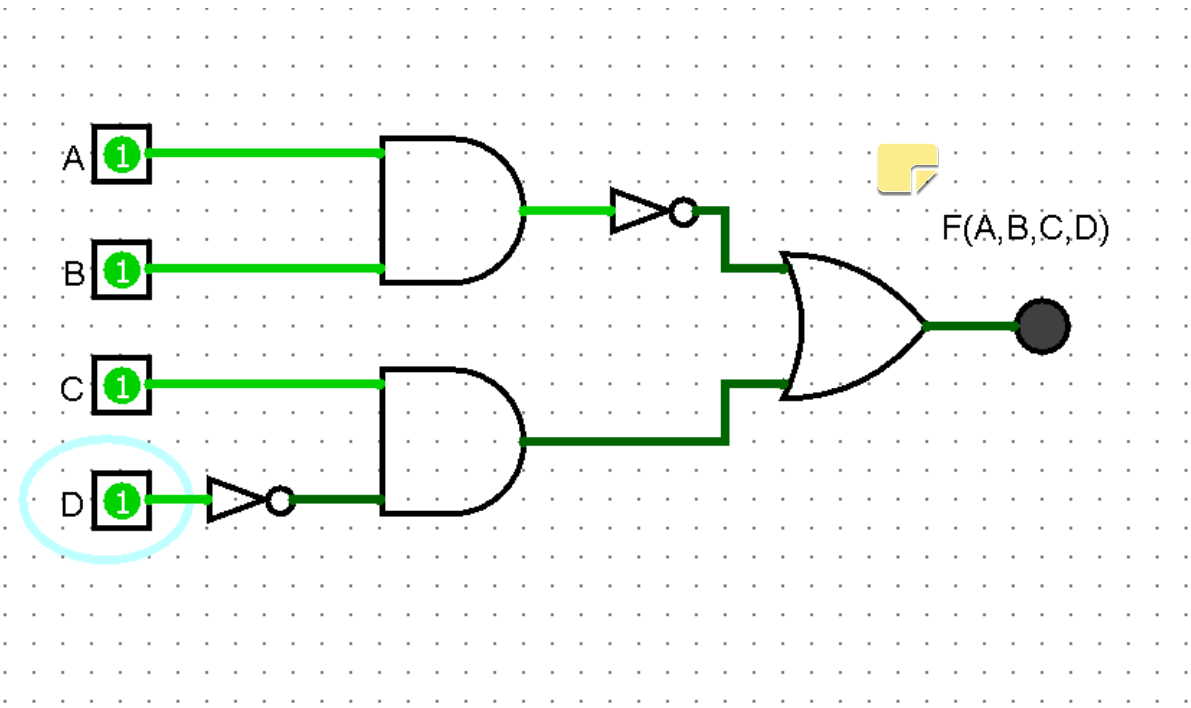

A	B	C	D	~(A . B) + (C . ~D)
0	0	0	0	1
0	0	0	1	1
0	0	1	0	1
0	0	1	1	1
0	1	0	0	1
0	1	0	1	1
0	1	1	0	1
0	1	1	1	1
1	0	0	0	1
1	0	0	1	1
1	0	1	0	1
1	0	1	1	1
1	1	0	0	0
1	1	0	1	0
1	1	1	0	1
1	1	1	1	0

3. Draw and implement the logic circuit represented by the below expression. Write the truth table to verify your circuit.

$$B+A.[D+C.(\overline{A}.B+\overline{C})]$$

A	B	C	D	$B+A.[D+C.(\overline{A}.$
0	0	0	0	0
0	0	0	1	0
0	0	1	0	0
0	0	1	1	0
0	1	0	0	1
0	1	0	1	1
0	1	1	0	1
0	1	1	1	1
1	0	0	0	0
1	0	0	1	1
1	0	1	0	0
1	0	1	1	1
1	1	0	0	1
1	1	0	1	1
1	1	1	0	1
1	1	1	1	1

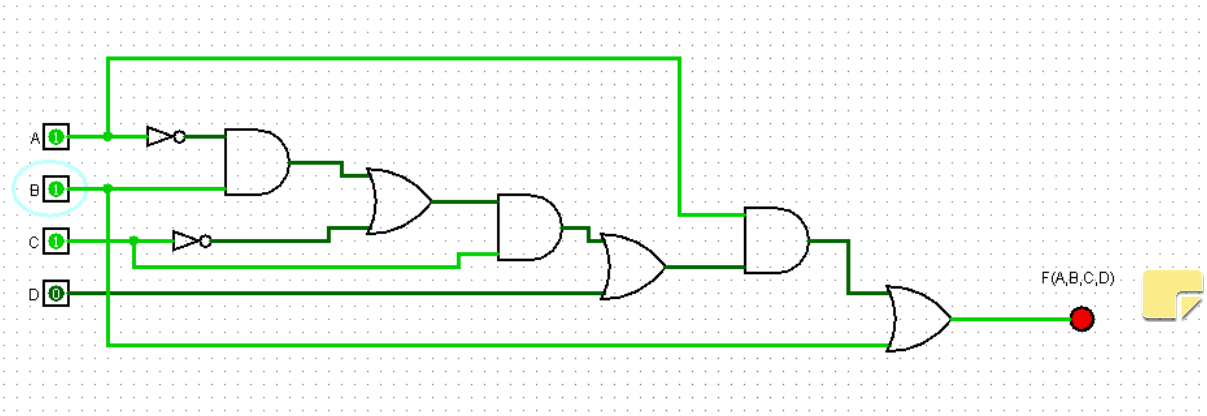

Conclusion

In this lab we learned how to model different logic equations using logic circuits and deduce their truth values using LogiSim. We also constructed truth tables to verify each logical equation and learned how to convert between circuit diagram and Boolean equations.